2nd process code

Aqua2use GWDD Dimensions :

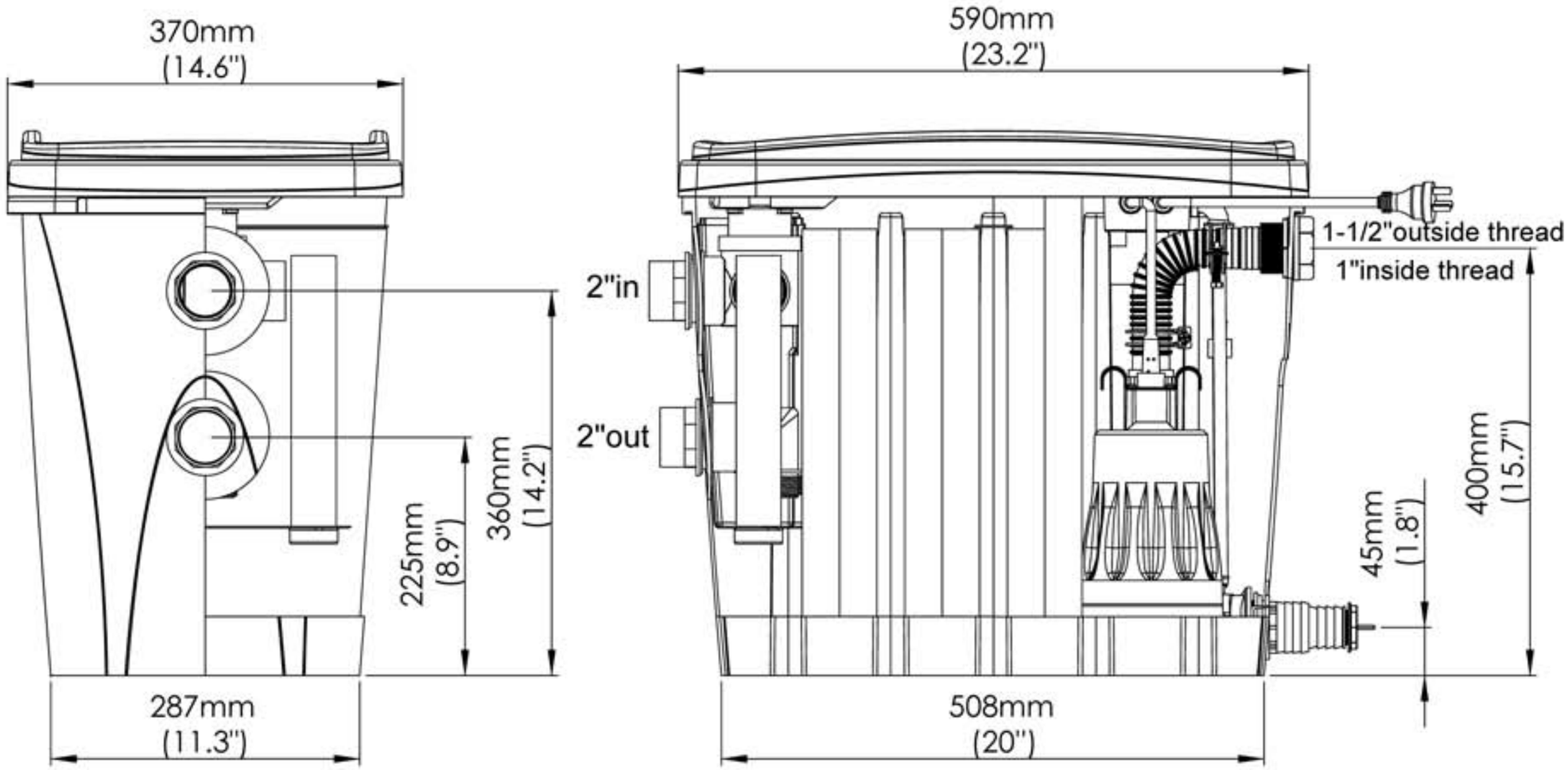

				Unless Otherwise Specified	δ (standard dev.)					UNITS	MM	MATERIAL		ITEM	Aqua2use		
				Fillet : R2 Parting Angle : 1°	< 0.5 ~ 6	±0.10	±0.30								"The Answer for Greywater Reuse"		
				Chamfer : C1 Free Burrs	< 6 ~ 30	±0.20	±0.50	APPROVE	Marc	SCALE		FINISH					
				Angular : ±0.5°	< 30 ~ 120	±0.30	±0.70										
				Matala	< 120 ~ 315	±0.50	±1.20	CHKD	Mike	DATE	990208	H.R.C		PART. NO.	Aqua2use GWDD		
				"Matala water alloy"	< 315 ~ 1000	±0.80	±2.00										
NO.	DESCRIPTION	APPR.	DATE	Matala Water Technology Co., Ltd.	<1000 ~ 2000	±1.20	±2.50	DRAWN	Kimi	FIRST USED ON				SERIAL NO.		EDITION	1.0